User's Guide

SQG15-AC - 1.5 GHz low impedance 10:1 passive AC probe
SQG15-DC - 1.5 GHz low impedance 10:1 passive DC probe
SQG30-AC - 3.0 GHz low impedance 10:1 passive AC probe
SQG30-DC - 3.0 GHz low impedance 10:1 passive DC probe
SQG60-AC - 6.0 GHz low impedance 10:1 passive AC probe
SQG60-DC - 6.0 GHz low impedance 10:1 passive DC probe

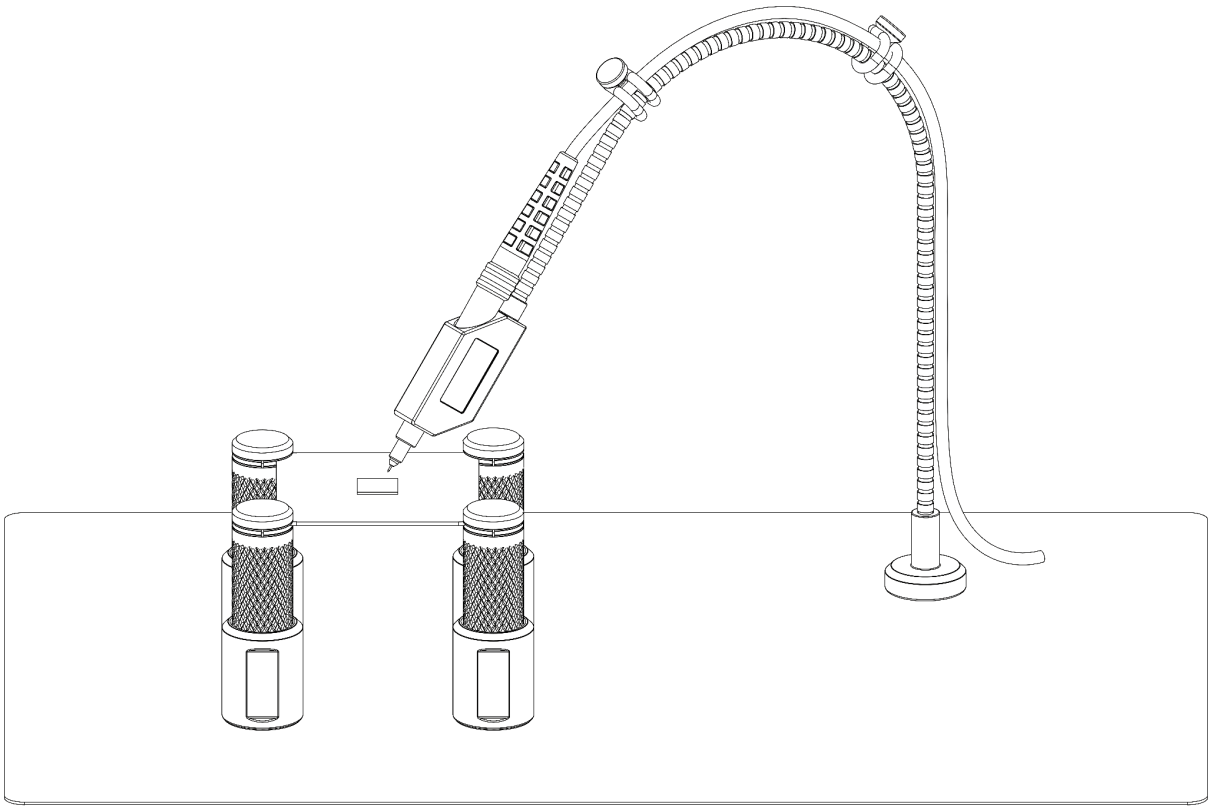

Made in Sweden by Sensepeek AB, Verkstadsgatan 2, Vellinge, Sweden
Rev 1.1 - Specifications are subject to change without notice.

Safety

To prevent possible death, personal injury, electrical shock, fire or damage to the product only qualified personnel should use this product, carefully read this safety information before use of the product. Follow all generally accepted safety practices and procedures for working with and near electricity. The product has been designed in accordance with the IEC 61010-031 standard and left the factory tested and in a safe condition.

Safety descriptions found throughout this user guide:

A WARNING identifies conditions or practices that could result in death or injury. To prevent injury or death only qualified personnel should use this product, only as instructed and with only accessories supplied or recommended. Protection provided by the product may be impaired if used in a manner not specified in this guide.

A CAUTION identifies conditions or practices that could result in damage to connected product or equipment.

Maximum input ranges

The full-scale measurement ranges are the maximum voltages that can be accurately measured by the probe for safe operation. The table and frequency derating chart presented below provide information about the highest allowable input voltage for these probes.
This is the maximum voltage that can be safely and accurately measured using the probes. The maximum input voltage depends on factors such as signal frequency, measurement category, and the specific instrument employed alongside the probe.

Model	Maximum Input Voltage
SQG15, SQG30, SQG60	30V RMS (CAT0)

WARNING To avoid overloading the probe, note that its maximum input voltage rating decreases as the frequency of the applied signal increases.

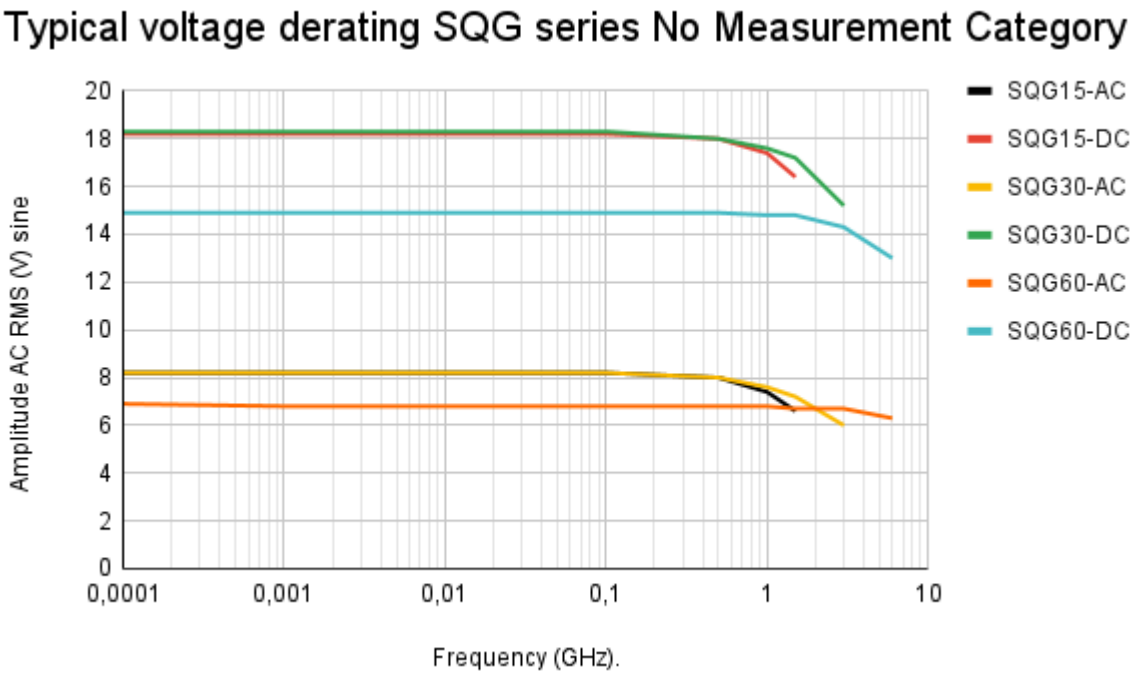

WARNING Signals exceeding the voltage limits in the table below are defined as "hazardous live" by EN 61010.

Signal voltage limits of EN 61010-031:2022		
±60 V DC	30 V AC RMS	± 42.4 V pk max.

WARNING To prevent electric shock, do not connect the probe to voltages exceeding the levels specified in this user guide and do take all necessary safety precautions when working on equipment where hazardous live voltages may be present.

WARNING Do not connect to a mains voltage or a derived voltage that can carry the overvoltage transients that may be present. Note that the probe's maximum input voltage rating decreases as the frequency of the applied signal increases. Do not use this probe for measurements in categories III and IV.

Grounding

WARNING Do not ever connect the ground input to, or allow it to touch, any electrical potential other than ground. To prevent death or personal injury, always measure that there is no significant DC or AC voltage between the probe ground and the point to which you intend to connect it.

CAUTION Applying a voltage to the ground input is likely to cause permanent damage to the probe or other connected equipment.

Input impedance

CAUTION
To prevent circuit overload during testing, it's important to observe that the input impedance of the probe decreases as the frequency of the applied signal rises.

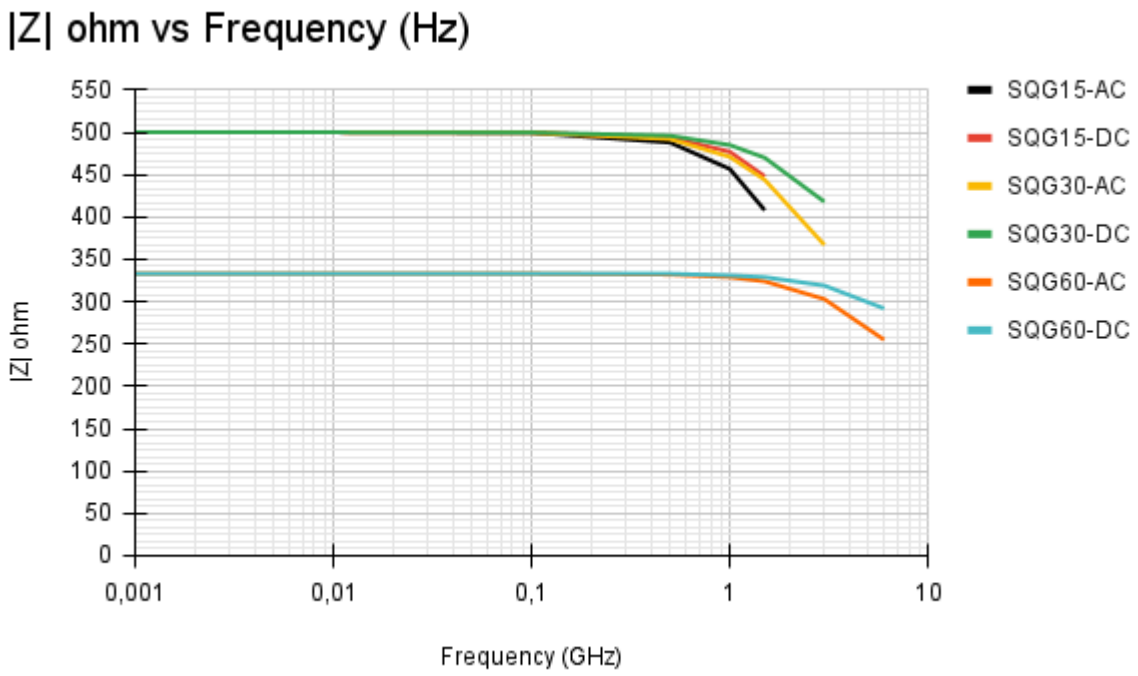

Environment

WARNING To prevent death or injury, do not use near explosive vapor or gas.

CAUTION To prevent damage to the probe, always operate and store your probe according to the levels specified in this guide.

Care of the product

The probe contains no user-serviceable parts. Repair, servicing and calibration require specialized test equipment and must only be performed by Sensepeek. Inspect the instrument and all probes, connectors, cables and accessories before use for signs of damage.

WARNING To prevent death or injury, do not try to open any part of the assembly, do not use the product if it appears to be damaged in any way, and stop use immediately if it behaves abnormally.

CAUTION Always handle with care to avoid injury from the sharp tip. Ensure that the probe is completely dry before use. Do not allow liquids to enter the probe. Take care to avoid mechanical stress or tight bends on the arm and cable connecting the probe head to the oscilloscope. Mishandling will degrade performance and measurement accuracy and is not covered by the warranty. Avoid all kind of mechanical shock to the probe assembly.

Introduction

These high frequency passive 10:1 probes are suitable for both RF instruments and oscilloscopes with a 50 Ω input impedance and can be used for Gigabit, RF and Microwave measurements.

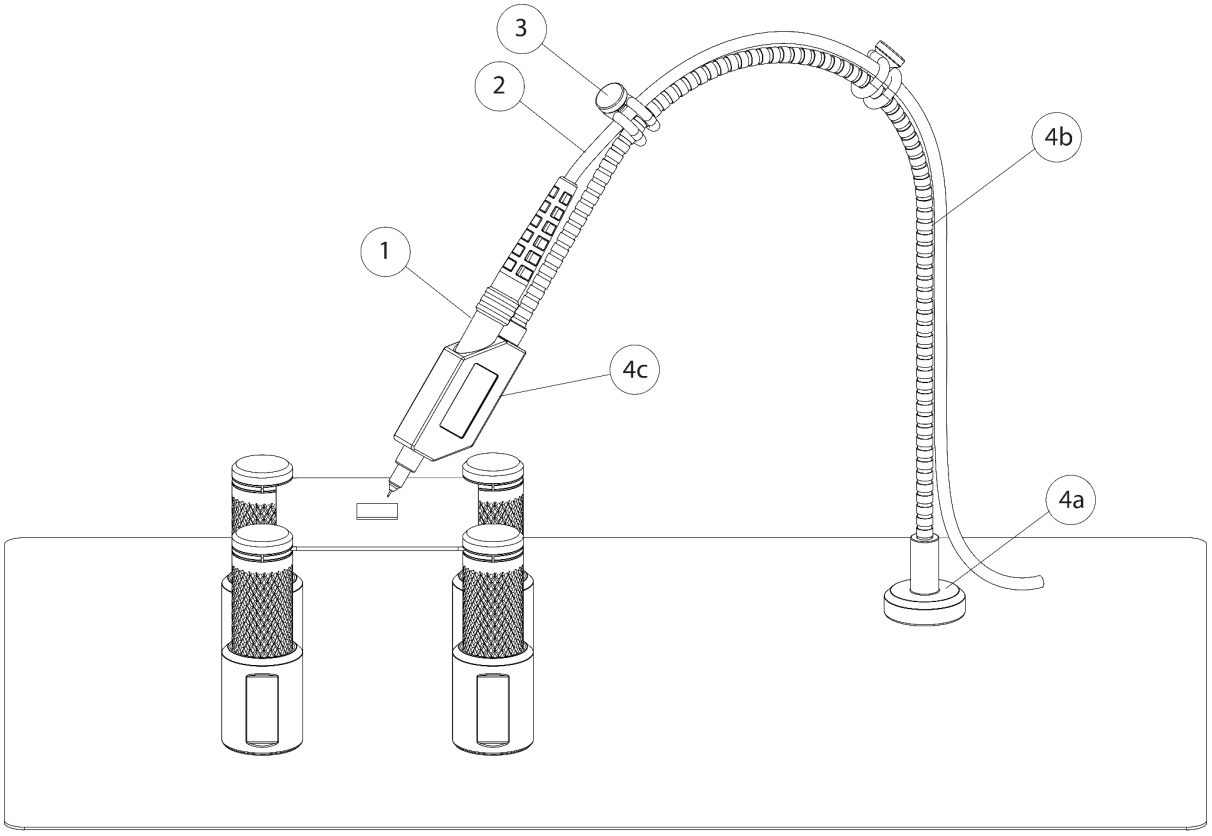

Overview

1. Probe
2. Probe cable
3. Color coded cable holder
4. Probe holder
    a. Probe base (with magnet)
    b. Flexible arm
    c. Probe arm grip

Getting started

1. Insert the probe inside the probe holder cavity
2. Snap on the color coded cable holders on the flexible arm and the probe cable to hold and identify your oscilloscope channel
3. Choose GND option
4. Connect the probe cable BNC/SMA connector (not shown in picture) to your instrument.

Warranty

Sensepeek products are warranted for 12 months from the date of purchase. The warranty covers defects in material and workmanship. This warranty does not apply to components (parts and accessories) subject to natural and normal wear and tear. This warranty does not in any way limit the rights you have under mandatory law.

Disposal

Sensepeek offers our customers the opportunity to return products at the end of their functional lives to Sensepeek for recycling. Qualifying products are marked with the WEEE symbol shown above. Or ensure WEEE compliant collection and treatment yourself. Do not dispose of this product as unsorted municipal waste

Delivery cost of any authorized product returned to Sensepeek will be at the expense of the sender.

Ground loop

Try to use two grounding points as close as possible to the component being measured. A small ground loop injects less noise. Do not increase the length of the ground. Making it shorter will only affect the measurement in a positive way with higher bandwidth and less noise.

Operating instructions

Position the probe - Place the probe foot on the base plate and the magnet will keep it in place.

Reposition the probe - Slide the probe foot on the base plate

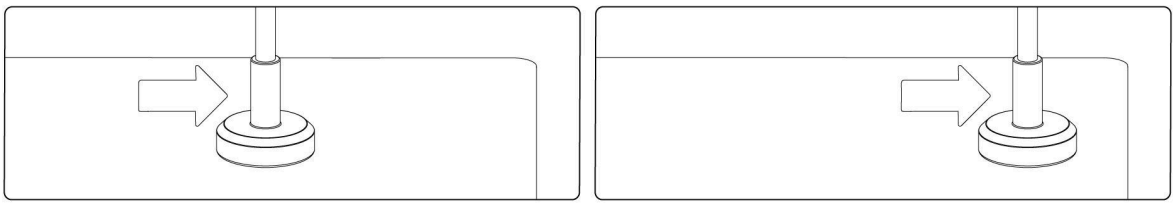

Detaching the probe - Tilt the probe foot gently and remove the probe arm. Avoid pulling on the flexible arm!

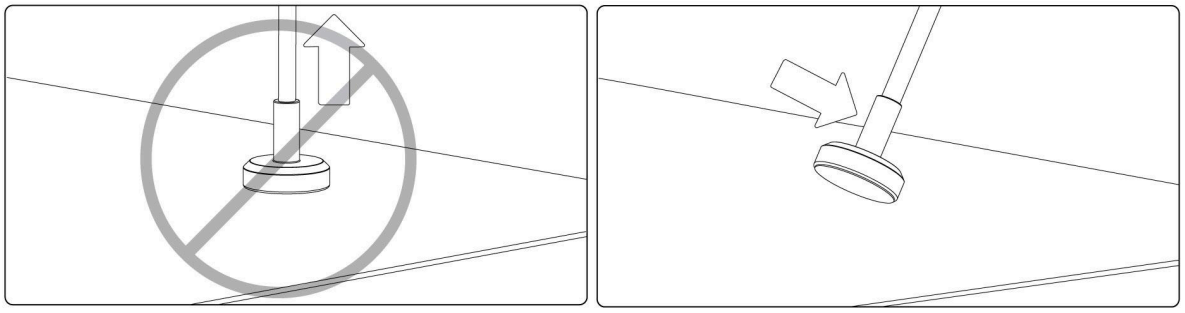

Mounting the probe

1. Insert the probe inside the probe arm cavity
2. Push the probe inside the cavity until it stops
3. The friction will hold the probe in place

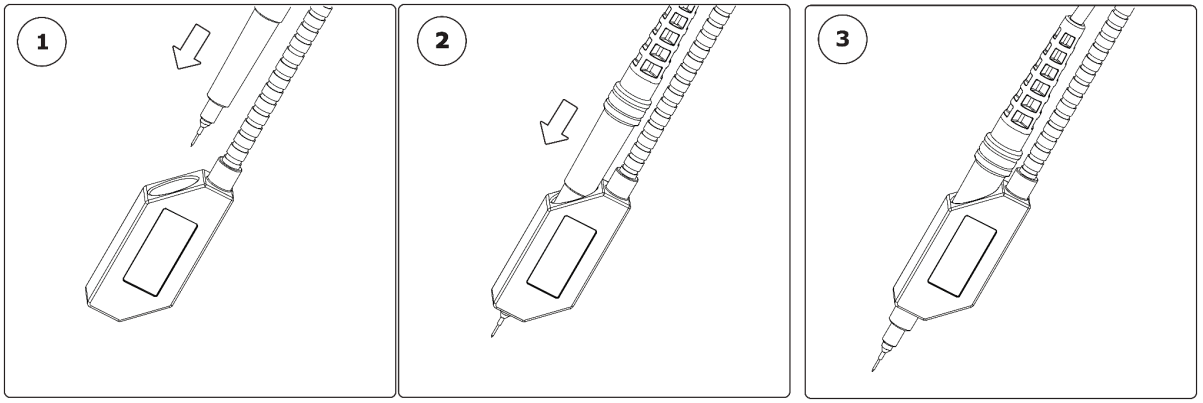

Dismounting the probe

1. Take a firm grip on the probe handle (Do not pull the cable)
2. Pull the probe gentle until it loosens
3. Remove the probe from the probe arm

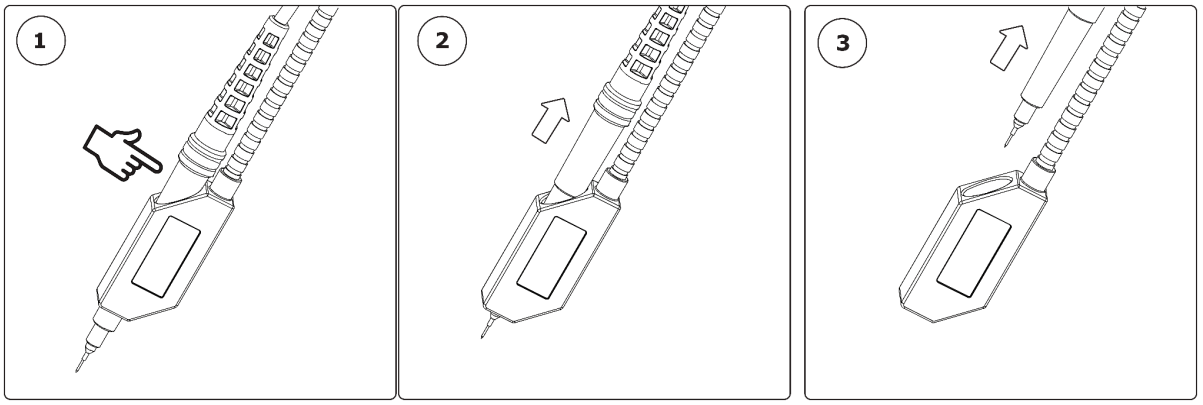

Measuring with the probe

1. Position the arm in 45 degree angle
2. Lift the probe in the probe grip
3. Compress the needle to the measuring target
4. Release the probe grip gently

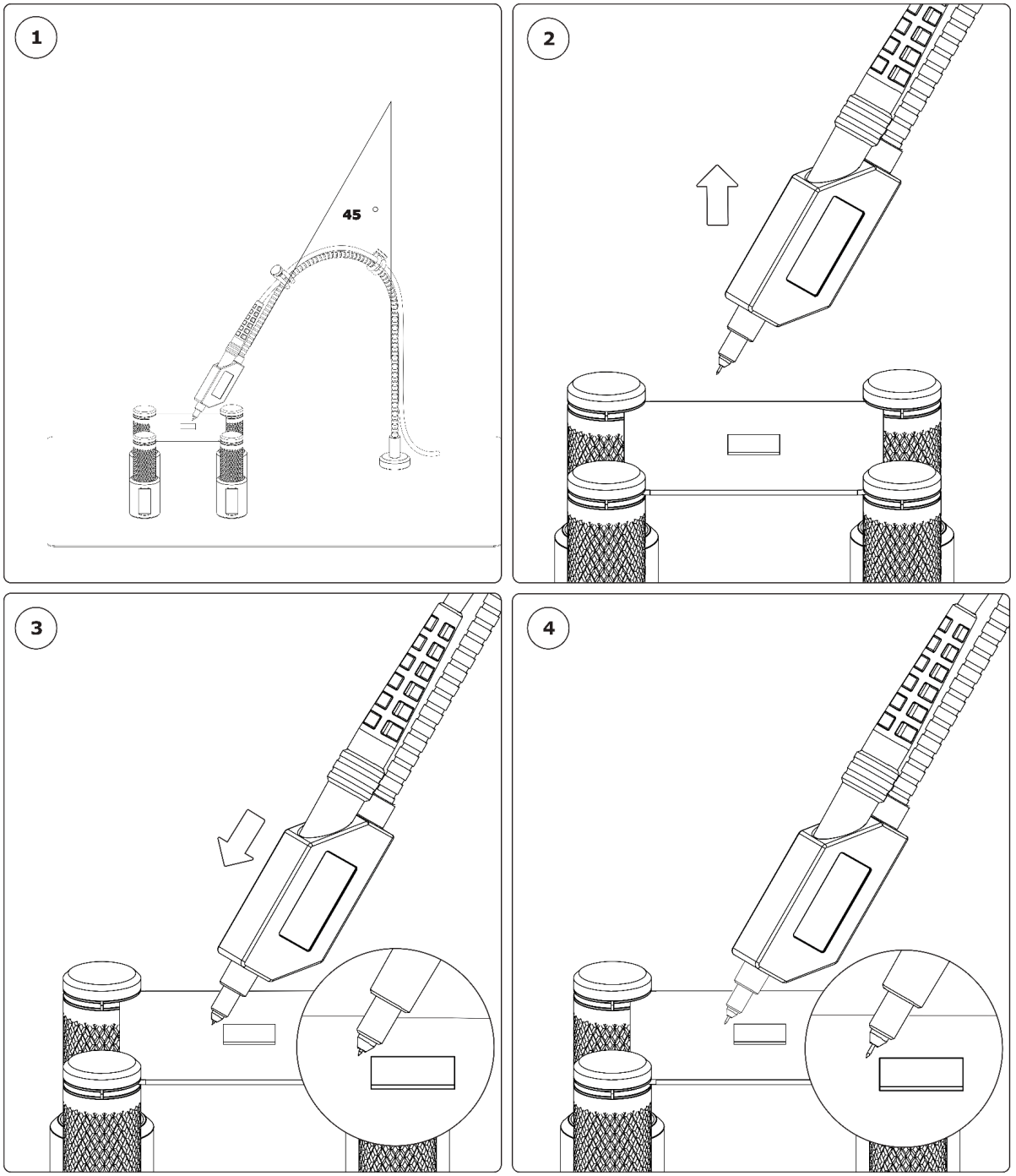

Overview of the different GND options

	SQ15		SQ30		SQ60	
	Handheld	Handsfree	Handheld	Handsfree	Handheld	Handsfree
Dual ground 3,5 mm 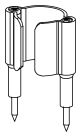	Yes	Yes	Yes	Yes		
Dual ground 5 mm 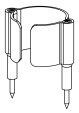					Yes	Yes
Ground spring 3,5 mm SQG 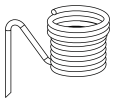	Yes	No	Yes	No	No	No

Mounting the dual GND options

1. Align the hole on the dual GND towards the needle
2. Press on the dual GND on the metal cylinder
   Please be aware of the sharp needle tip!

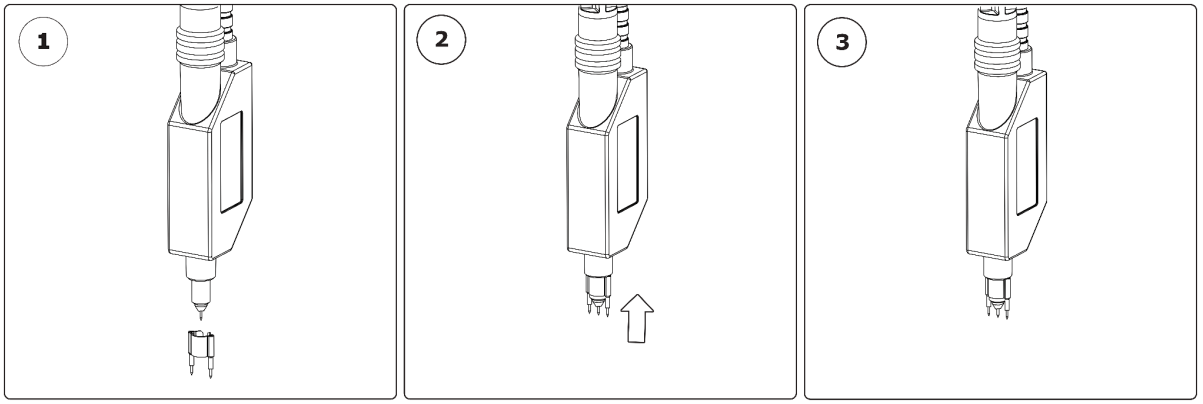

Mounting the GND spring

1. Align the hole on the 3,5mm GND towards the needle
2. Press and <u>twist</u> on the 3,5mm GND on the metal cylinder
   Please be aware of the sharp tip!

Ground dimensions

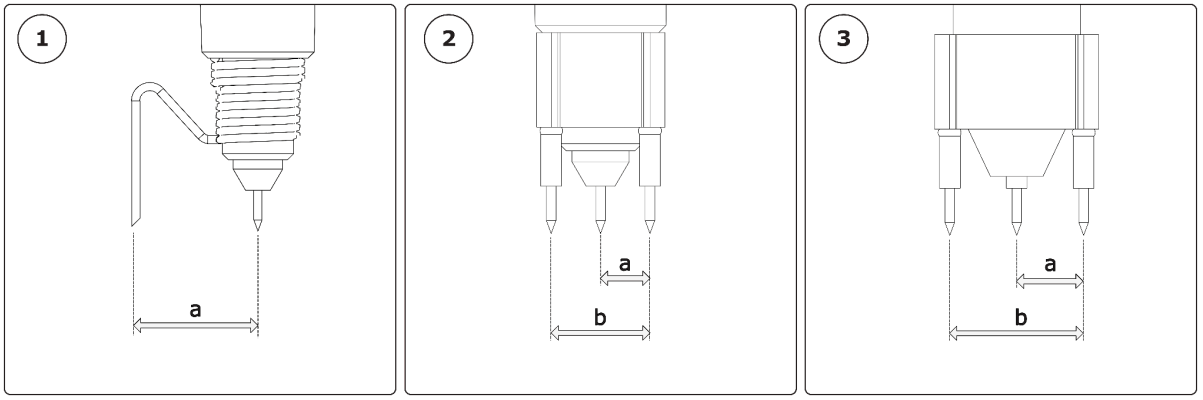

1. Ground spring 3,5 mm
    a. 6,5 mm (flexible)
2. Dual Ground 3,5 mm
    a. 2,3 mm
    b. 4,6 mm
3. Dual Ground 5mm
    a. 3,0 mm
    b. 6,0 mm

Probe needle replacement

1. Notice the replaceable needle tip. Please be aware of the sharp needle tip!
2. Pull out the replaceable needle tip by hand or use pliers.
3. Pick up the new needle tip and insert in the sleeve with pliers.
4. Press the needle vertically against a planar stable surface and make sure it is correctly inserted.

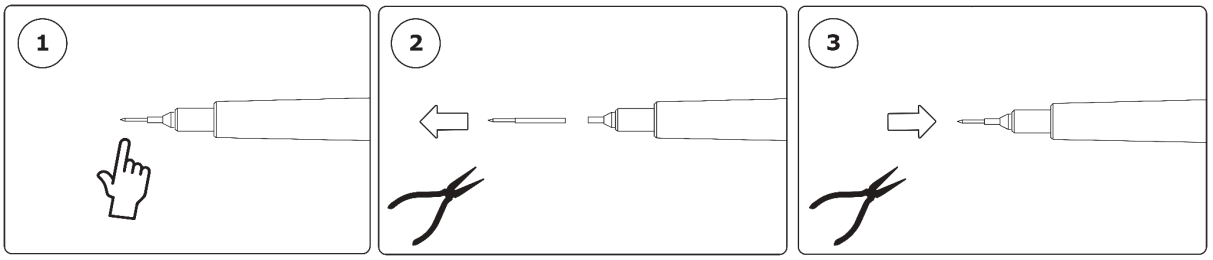

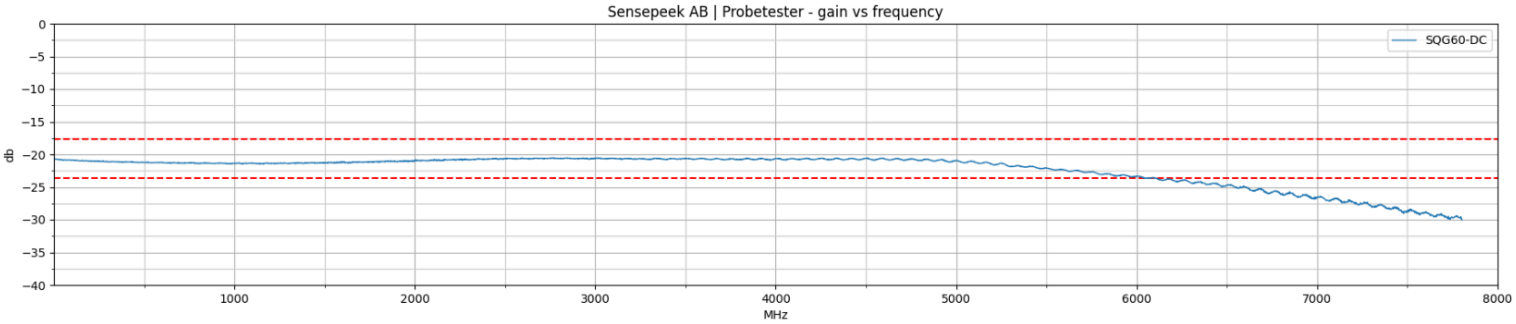

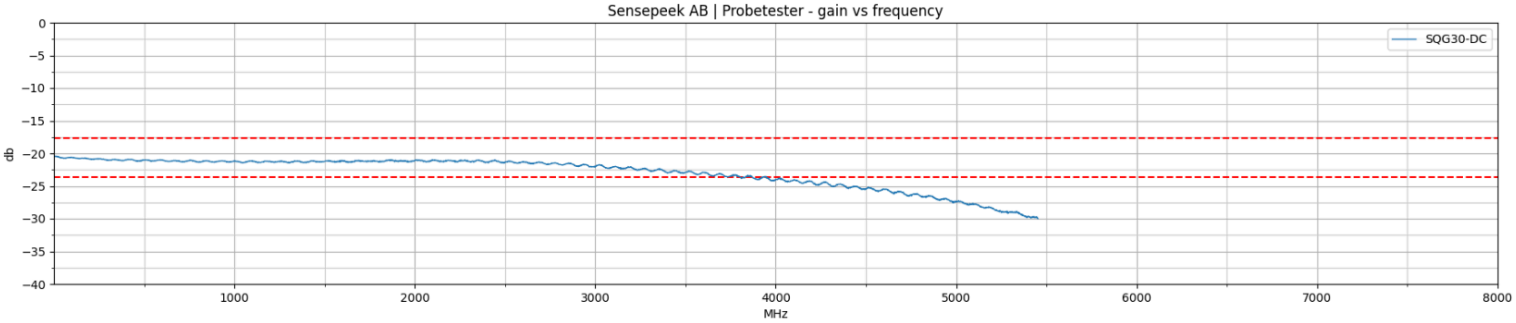

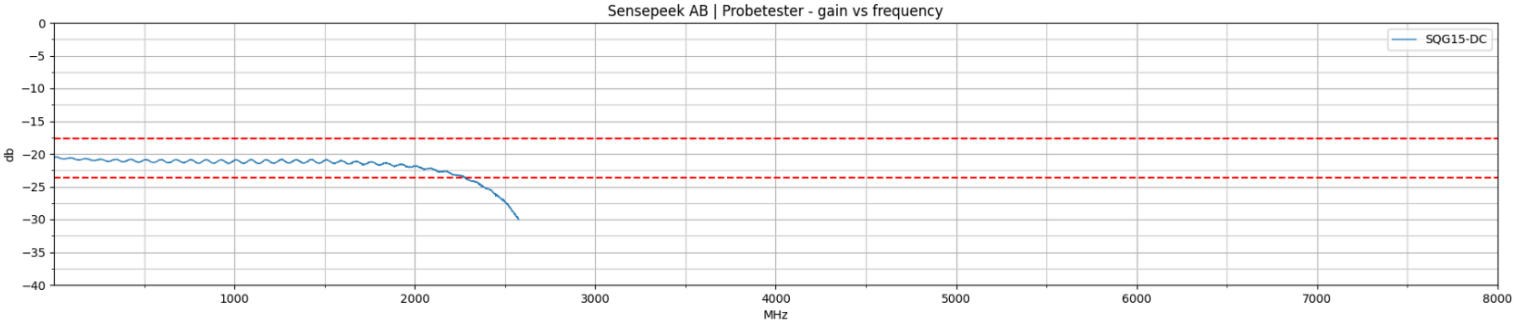

*Graphs show typical performance of actual measured probes from volume production.

SPID (Sensepeek probe ID): SQG15-DC B26083, SQG30-DC E45F44 and SQG60-DC C50260

Specifications

Model	SQG15-AC	SQG15-DC	SQG30-AC	SQG30-DC	SQG60-AC	SQG60-DC
Coupling	AC	DC	AC	DC	AC	DC
Nominal division ratio	10:1					
Bandwidth (-3dB), (note 1)	> 1.5 GHz		> 3 GHz		> 6 GHz	
Output Connector	BNC		SMA		SMA	
Max. usable data rate (fundamental)	3 Gbps		6 Gbps		12 Gbps	
Max. usable data rate (3rd harmonic)	1 Gbps		2 Gbps		4 Gbps	
Max. usable data rate (5th harmonic)	0.6 Gbps		1.2 Gbps		2.4 Gbps	
Transition time (note 2)	< 190 ps		< 103 ps		< 52 ps	
Probe tip impedance, nominal	500 Ω		500 Ω		333 Ω	
Probe tip capacitance, typical, (note 3)	0.35 pF		0.35 pF		0.35 pF	
Probe tip capacitance, maximum (note 4)	1.36 pF	1.69 pF	1.31 pF	1.25 pF	0.69 pF	0.69 pF
Return loss for probed line	max < -10 dB typically -26 dB to -11.0 dB in the range 0 - 1.5 GHz	max < -10 dB typically -26 dB to -11.5 dB in the range 0 - 1.5 GHz	max < -3 dB typically -26 dB to -3.70 dB in the range 0 - 3 GHz	max < -4 dB typically -26 dB to -4.30 dB in the range 0 - 3 GHz	max < -6.1 dB typically -23 dB to -6.2 dB in the range 0 - 6 GHz	max < -5.8 dB typically -23 dB to -6 dB in the range 0 - 6 GHz
Accuracy for line Z0 = 36 ohm to 60 ohm (note 6)	0.2 dB	0.2 dB	0.2 dB	0.2 dB	0.3 dB	0.3 dB
Accuracy for line Z0 = 0 ohm to 100 ohm (note 6)	0.83 dB	0.83 dB	0.83 dB	0.83 dB	1.2 dB	1.2 dB
Nominal error for line Z0 = 50 ohm (note 6)	0.424 dB	0.424 dB	0.424 dB	0.424 dB	0.629 dB	0.629 dB
Nominal error for line Z0 = 75 ohm (note 6)	0.628 dB	0.628 dB	0.628 dB	0.628 dB	0.927 dB	0.927 dB
Continues voltage	6.6 V AC RMS	16.4 V RMS	6.0 V AC RMS	15.2 V RMS	6.3 V AC RMS	13.0 V RMS
DC blocking voltage (max)	50 V DC	-	50 V DC	-	50 V DC	-
Peak voltage (note 5)	±60 V DC, 30 V AC RMS, ± 42.4 V pk max.					
Pulse width at peak voltage	-	-	-	-	< 500 ns	
Duty cycle pulse at peak voltage	-	-	-	-	< 1:48 (2.08%)	
Low-frequency cut off (-3dB) (note 7)	377 Hz	-	359 Hz	-	536 Hz	-
Flatness (+/- 0.5dB)	1.0 kHz to 1.5 GHz	0 to 1.5 GHz	1.0 kHz to 2.6 GHz	0 to 2.7GHz	1.15 kHz to 4.8 GHz	0 to 5.2 GHz
Output impedance (nominal)	475 Ω		475 Ω		76 Ω	
Output return loss	-				< -10 dB up to 5.5 GHz -8 dB @ 6 GHz	
Ringing max (+/-)	0.33 dB @ 1.5 GHz	0.33 dB @ 1.5 GHz	0.14 dB @ 3 GHz	0.125 dB @ 3 GHz	0.065 dB @ 3 GHz, 0.15	0.05 dB @ 3 GHz, 0.26 dB

					dB @ 6 GHz	@ 6 GHz
Additive voltage noise @ 23 deg C (note 3)	110 µV	110 µV	156 µV	156 µV	180 µV	180 µV
Single GND Bandwidth (-3dB)	1.5 GHz	1.5 GHz	2 GHz	2 GHz	-	-
Nominal probe tip pitch	Dual GND 2.3 mm / Single GND 6.5 mm (flexible)				Dual GND 3.0 mm	
Group delay (+/-)	-				6ns +/-1ns (+/-1.5ns up to 4GHz)	
Environment						
Operating temperature range	0 - 50 °C					
Storage temperature range	-20 to 70 °C					
Temperature range for stated specifications	15 - 30 °C					
Max. humidity, operating (non-condensing)	80 % to +30 °C, decreasing linearly to 40 % at +50 °C					
Max. humidity, storage (non-condensing)	80 %					
Max. altitude Operating	2 km					
Pollution degree	2 (As defined in IEC 61010-031. Only non-conductive pollution. Occasionally, however, a temporary conductivity caused by condensation must be accepted.)					
Safety	CAT 0, IEC 61010-31:2022					
EMC approvals	Not applicable					
Environmental approvals	WEEE, RoHS					
General						
Supplied accessories	Probe holder for handsfree measurement, storage case, cable holders, replacement tip needle, dual ground needle, single ground spring (not included in 6.0 GHz models)					
Cable length with probe and connector	1200 mm					
Dimensions (probe head)	Length 90 mm, Ø 8.9mm					
Weight with probe and cable	34 g					

All specifications are subject to change without notice.

note 1, Measured, The probes can continue to measure above the rated bandwidth but with decreased signal, the probe will reach the f3dB limit above the rated bandwidth.

note 2, Calculated 10% - 90%

note 3, Calculated

note 4, Measured

note 5, WARNING Signals exceeding the voltage limits in the table below are defined as "hazardous live" by EN 61010.

note 6, Simulated

note 7,Limit with sinus, (square wave will be flat from kHz)

CE UK CA